C-14315

ITEM	DESCRIPTION	DETAIL	REQUIRED FXD.	REQUIRED FLT.
1	HOUSING SAF 056 K 10-00	C-11057-R Ⓐ	1	1
2	SPHERICAL ROLLER BEARING	23056K/W-33	1	1
3	STABILIZING RING A-8819	A-10575	2	0
4	ADAPTER SNP-3056 10-00	24272	1	1
5	TRIPLE SEAL RING ER-705	A-10574	2	2
6	DOWEL	$\frac{1}{2}$ x 1" LONG	2	2
7	CAP BOLT SQUARE HEAD	$1\frac{1}{4}$-7 NC x 15" LONG Ⓑ	4	4
8	CAP BOLT HEX. NUT	$1\frac{1}{4}$-7 NC	4	4
9	LOCKWASHER	$1\frac{1}{4}$ SPLIT MED.	4	4
10	PIPE PLUG	$\frac{3}{8}$-18 NPT	4	4

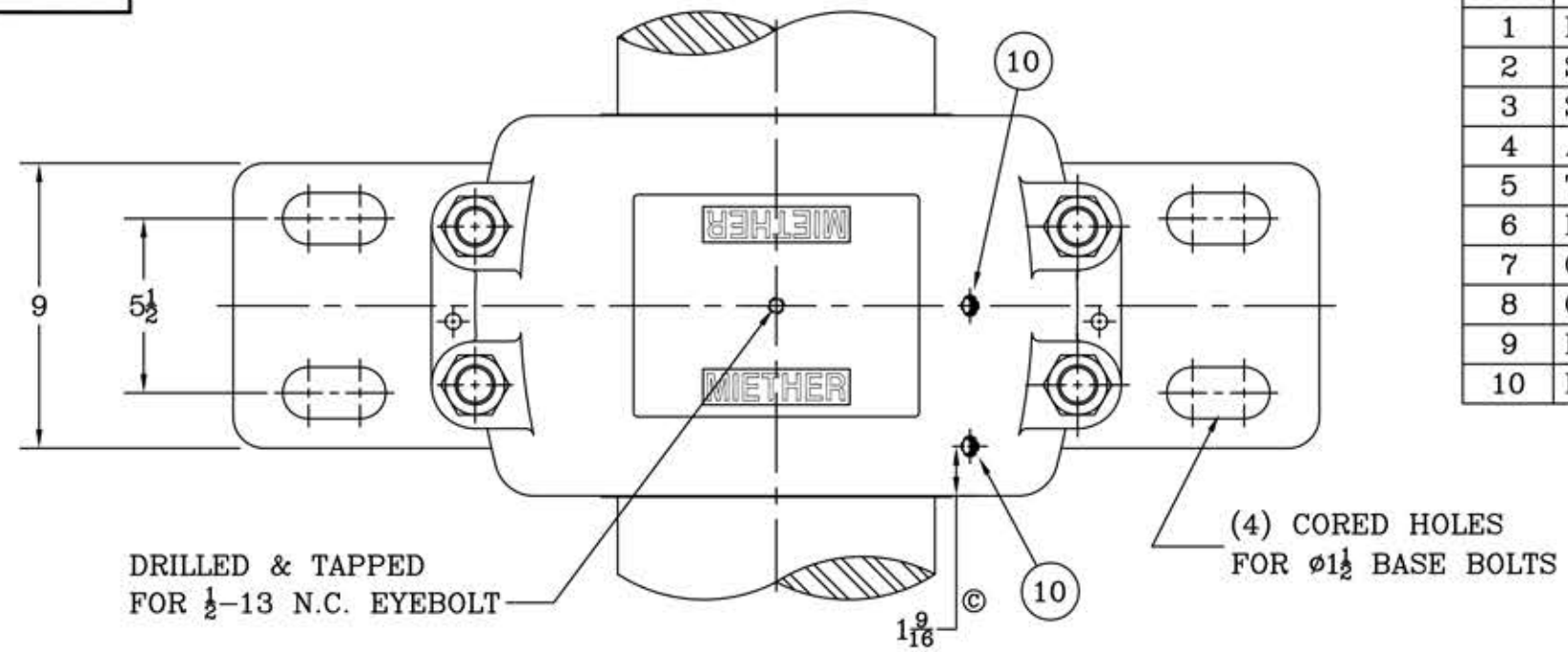

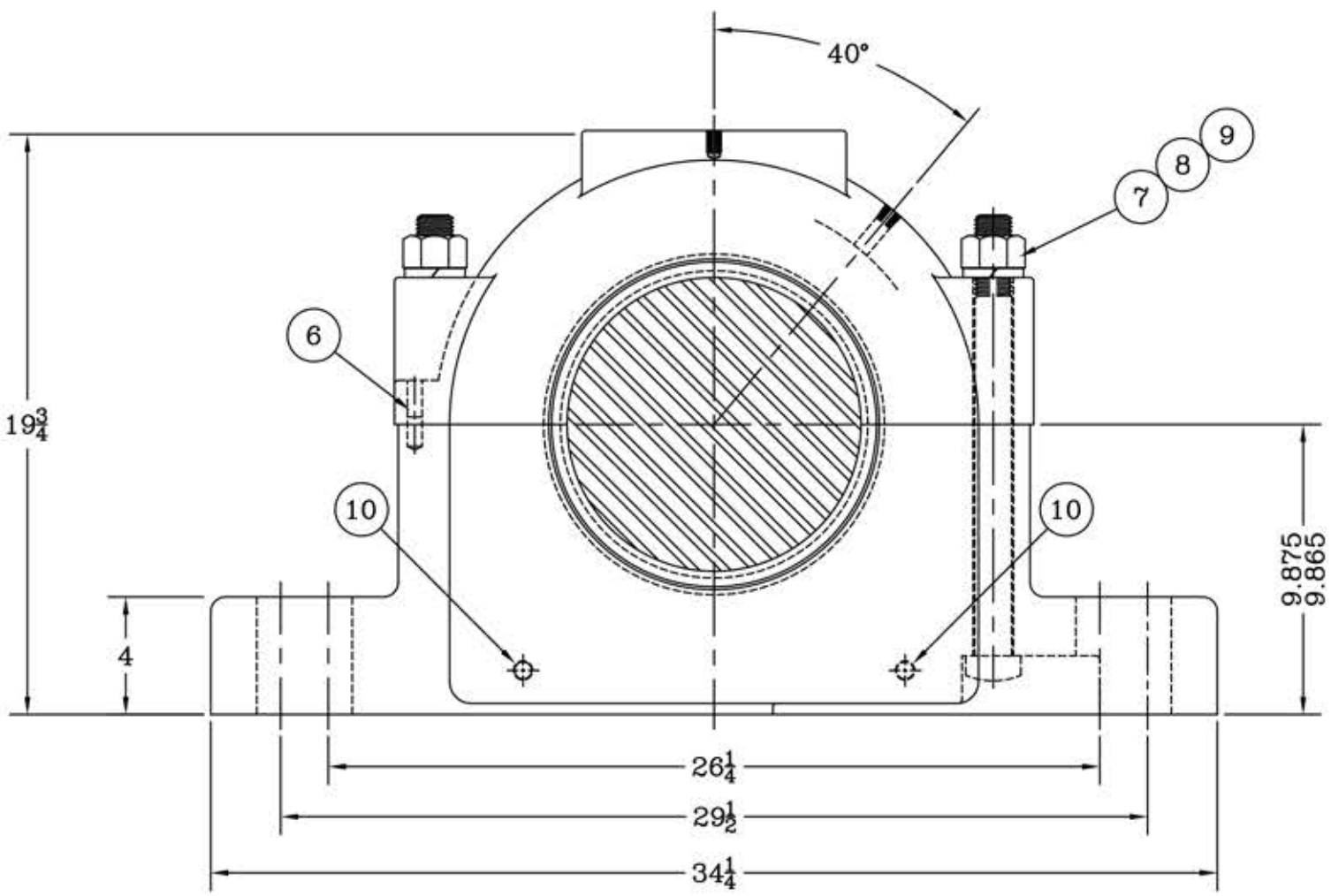

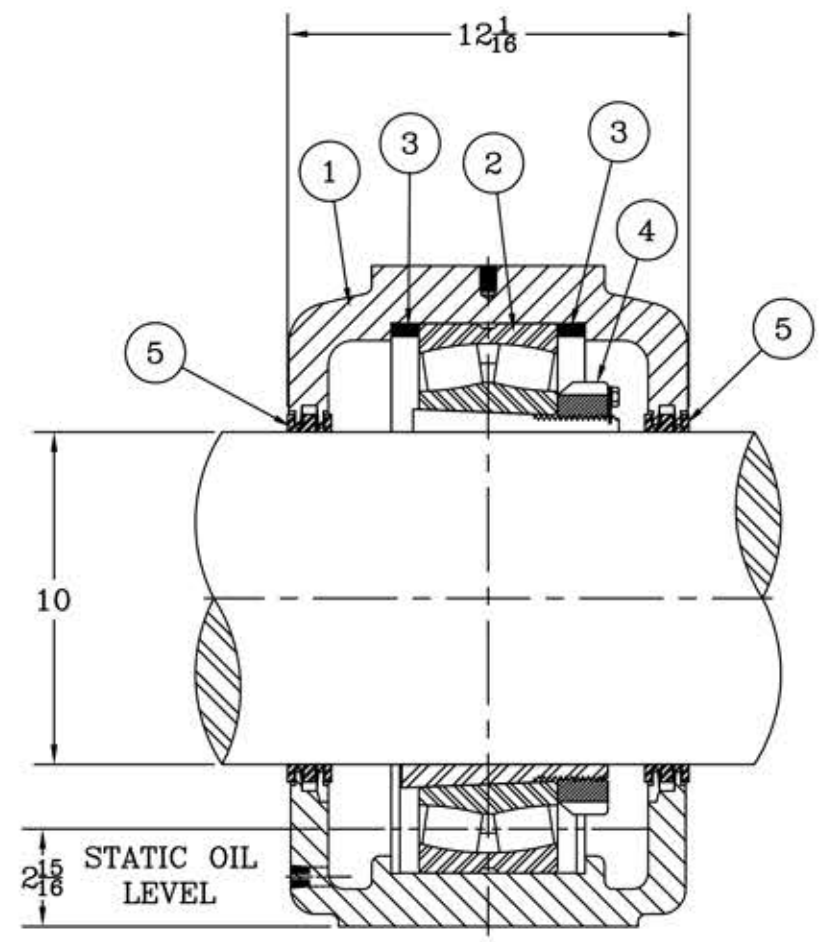

FIXED

FLOAT

REDRAWN FOR CONFORMITY RWB per KAB 1-9-04

REDRAWN FOR CLARITY RWB 9-28-98

© ADDED PIPE TAP

Ⓑ WAS $14\frac{1}{2}$ LONG

Ⓐ WAS C-10573-R DSA 7-18-94

REVISIONS

TOLERANCE: UNLESS OTHERWISE SPECIFIED

FRACTIONS +- 1/32" ANGLES +- 0° 30'
DECIMALS +- .005" WELD +- 1/16"
CASTING +- 1/16"

A.I.S.I. STANDARD FINISHES

SYMBOL	C	D	E	F	G	J	K
MICRO-INCH VALUE	16	32	63	125	250	500	1000

MIETHER™ BEARING PRODUCTS

AN ALCO INDUSTRIES COMPANY

ODESSA, TX. USA

SAF 23056 K 10-00

ASSEMBLY DRAWING

SCALE 1 = 4	ASSEMBLY NO.
DRAWN OMI	
DATE 6-25-92	DRAWING NO. C-14315
CHK:	

This drawing is the sole property of Miether Bearing Products and contains confidential and proprietary information. It is being provided to you for your use and may not be disclosed to any third party or used for any other purpose without Miether's prior written consent. The [materials] must be returned to the Company upon its demand. Your acceptance of these materials constitutes your acceptance of the foregoing terms.